REVISION HISTORY			
REV	DESCRIPTION	DATE	APPROVED

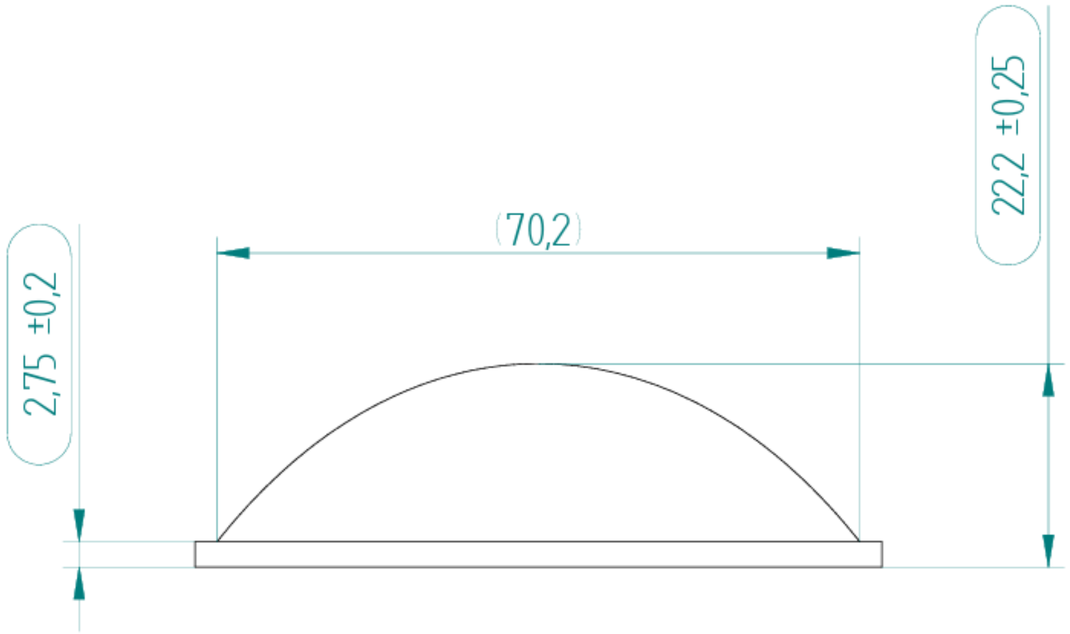

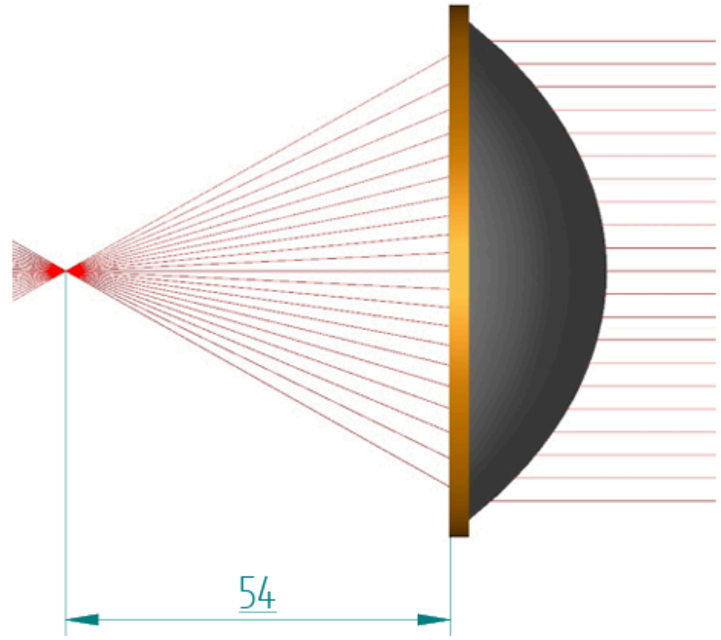

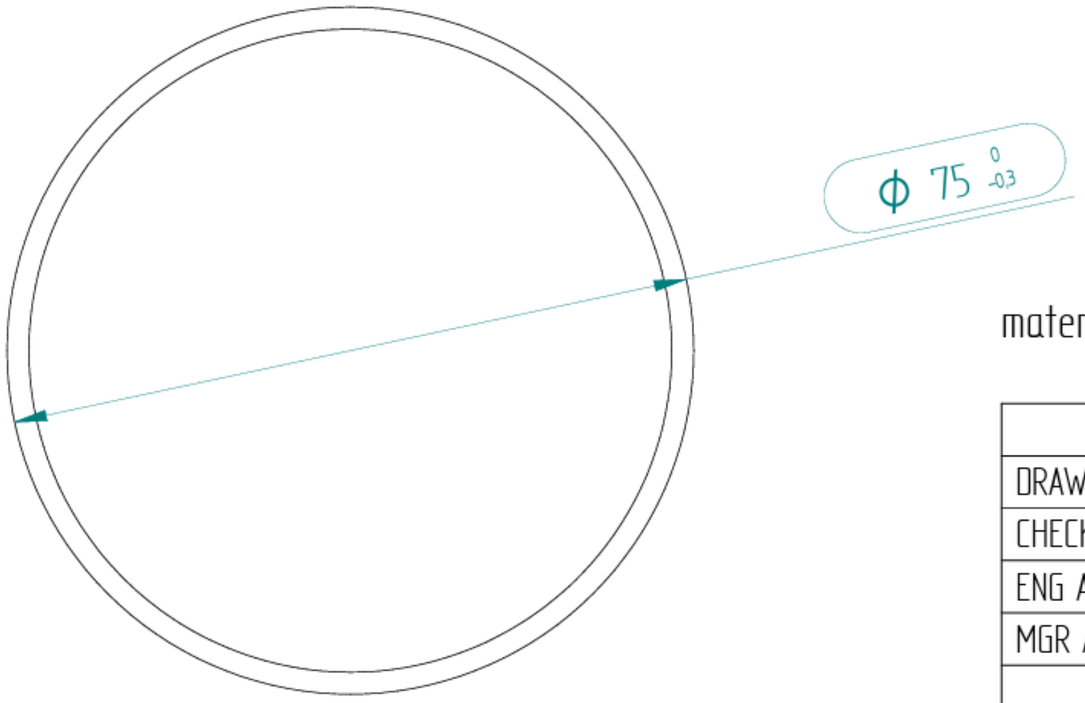

material : GLASS nd = 1,520

	NAME	DATE
DRAWN	jkocarek	09/13/23
CHECKED		
ENG APPR		
MGR APPR		

UNLESS OTHERWISE SPECIFIED
DIMENSIONS ARE IN MILLIMETERS
ANGLES ±X.X°
2 PL ±X.XX 3 PL ±X.XXX

ECOGLASS

TITLE
Aspheric lens

SIZE	DWG NO	REV
A4	A582 7522	

FILE NAME: F54D75.dft

SCALE:	WEIGHT:	SHEET 1 OF 1